HYUNDAI HEAVY INDUSTRIES CO.,LTD.

AC INDUCTION MOTOR DATA SHEET

Model No.or RFQ No.		Item No.	Rev. No. [0]
Project Name		Project No.	Quantity sets

GENERAL SPECIFICATION

Frame Size		200LL
Type		HL-XP
Enclosure(Protection)		Explosion Proof (IP55)
Method of Cooling		IC411(FC)
Rated Frequency		60 Hz
Number of Phases		3
Insulation Class		■ F ☐ B ☐ H
Temp. Rise at full load (by resistance method)		
	at 1.0 S.F	80 deg. C
Motor Location		■ Indoor ☐ Outdoor
Altitude		Less than 1000 meter
Relative Humidity		Less than 80 %
Ambient Temp.		40 deg. C (Max.)
Duty Type		Continuos (S1)
Service Factor		1.00
Mounting		■ B3 ☐ B5 ☐ V1 ☐ B3/B5
Bearing	Type	Anti-Friction
	DE/N-DE	6313ZC3 / 6211ZC3
	Lubricant	Grease(Gadus S2 V100 2)
External Thrust		Not applicable
Coupling Method		■ Direct ☐ V-Belt
Shaft Extension		■ Single ☐ Double
Terminal Box	Main	☐ Steel ■ Cast Iron
	Aux.	☐ Yes ■ No
	Location	Refer to Outline Drawing
Application		
Area classification		Hazardous
Type of Ex-Protection		Ex d IIB T4
Applicable Standard		KS,IEC

PERFORMANCE DATA

Rated Output		37 kW	50 HP	
Number of Poles		6		
Rotor Type		Squirrel Cage		
Starting Method*		■ D.O.L	☐ Y- △	
Rated Voltage		440 V	380 V	220 V
Current	Full Load	64.1 A	74.2 A	128.1 A
	Locked-rotor**	650 %	650 %	650 %
Efficiency				
	50% Load	92.5 %		
	75% Load	93.5 %		
	100% Load	93.0 %		
Power Factor(p.u)				
	50% Load	0.715		
	75% Load	0.790		
	100% Load	0.815		
Speed at Full Load		1175 r.p.m		
Torque				
	Full Load	30.7 kg·m		
	Locked-rotor**	170 %		
	Breakdown**	220 %		
Moment of Inertia (J)				
	Load(Max.)	63.250 kg·m²		
	Motor	0.470 kg·m²		
Sound Pressure Level (No-load & mean value at 1m from motor)				
		72 dB(A)		
Vibration		2.2 mm/sec (r.m.s)		
Permissible number of consecutive starts		Cold 3 times		
		Hot 2 times		
Paint	Munsell No.	4.0PB5.4/5.5(VL-451)		

ACCESSORIES

SUBMITTAL DRAWING

Outline Dimension Drawing	\	Motor Weight(Approx.)
B3	227B1600XI10	370 kg
B5		kg
V1		kg
B3/B5	0	0 kg
Main T-Box Ass'y	227B1470LA	

SPARE PARTS

REMARK

High Efficiency

Date	DSND	CHKD	CHKD	APPD
2011-04-14	W.H.BACK	S. J. RA	O. J. KIM	J. H. KIM

Note: Others not mentioned in this data sheet shall be in accordance with maker standard.
Above technical data are only design values and shall be guaranteed with tolerance of applicable standard.
Inspection and performance test shal

HYUNDAI HEAVY INDUSTRIES CO.,LTD.	PERFORMANCE CURVE	CURVE NO.
		P-HS-37/6

Type :	HL-XP	
Full Load Torque :	30.7	Kg.m
Motor moment of Inertia (J) :	0.470	$Kg.m^2$
Load moment of Inertia (J) :	63.250	$Kg.m^2$

37 kW 6 P 60 Hz

Speed at Full Load : 1175 RPM

Rated Voltage	440V	380V	220V	
Full Load Current	64.1A	74.2A	128.1A	

SPEED VS TORQUE & CURRENT CURVE

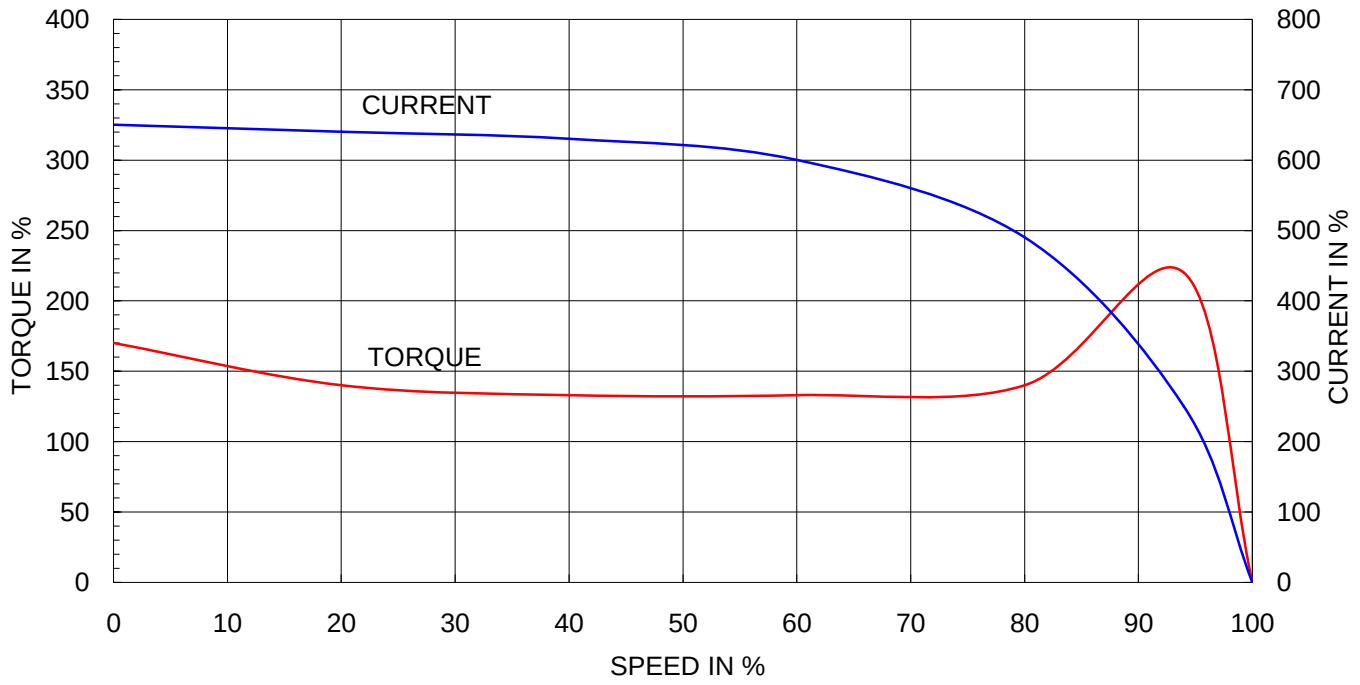

OUTPUT VS EFF., P.F & CURRENT CURVE

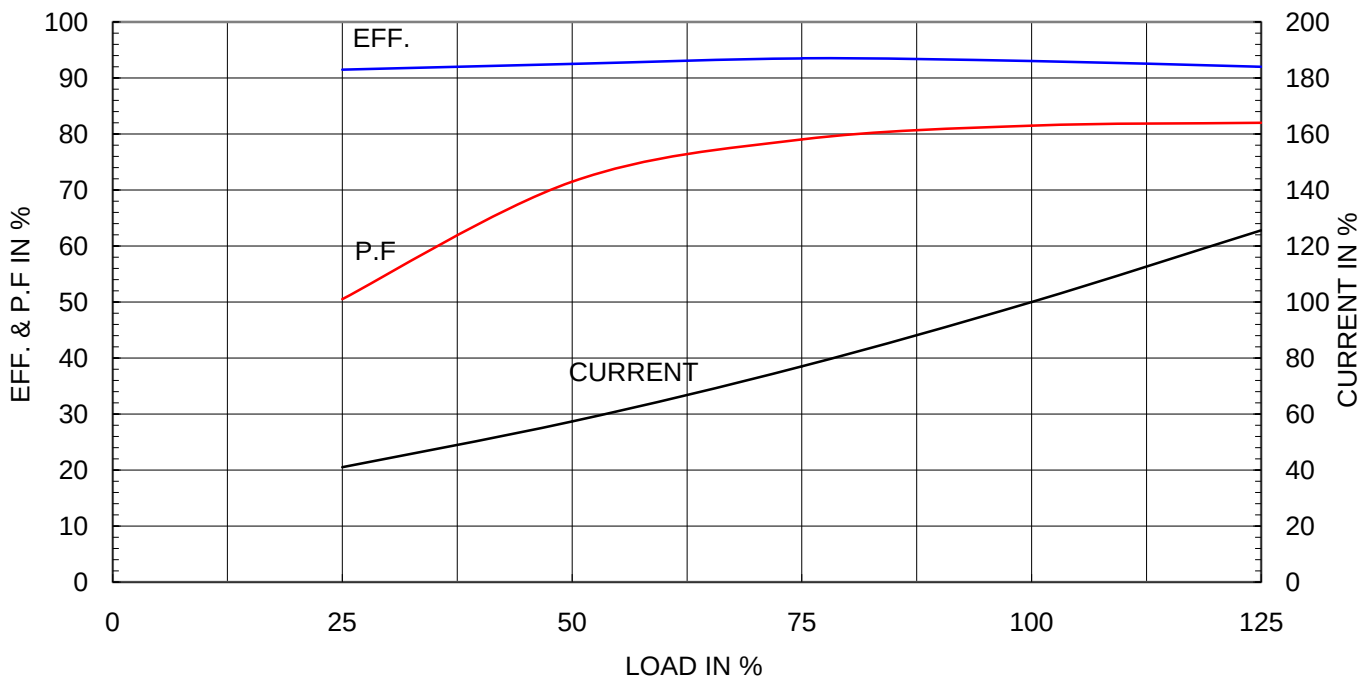

HYUNDAI HEAVY INDUSTRIES CO., LTD.	TEFC THREE PHASE INDUCTION MOTOR	TYPE	TR, TRC
			CAST IRON FRAME

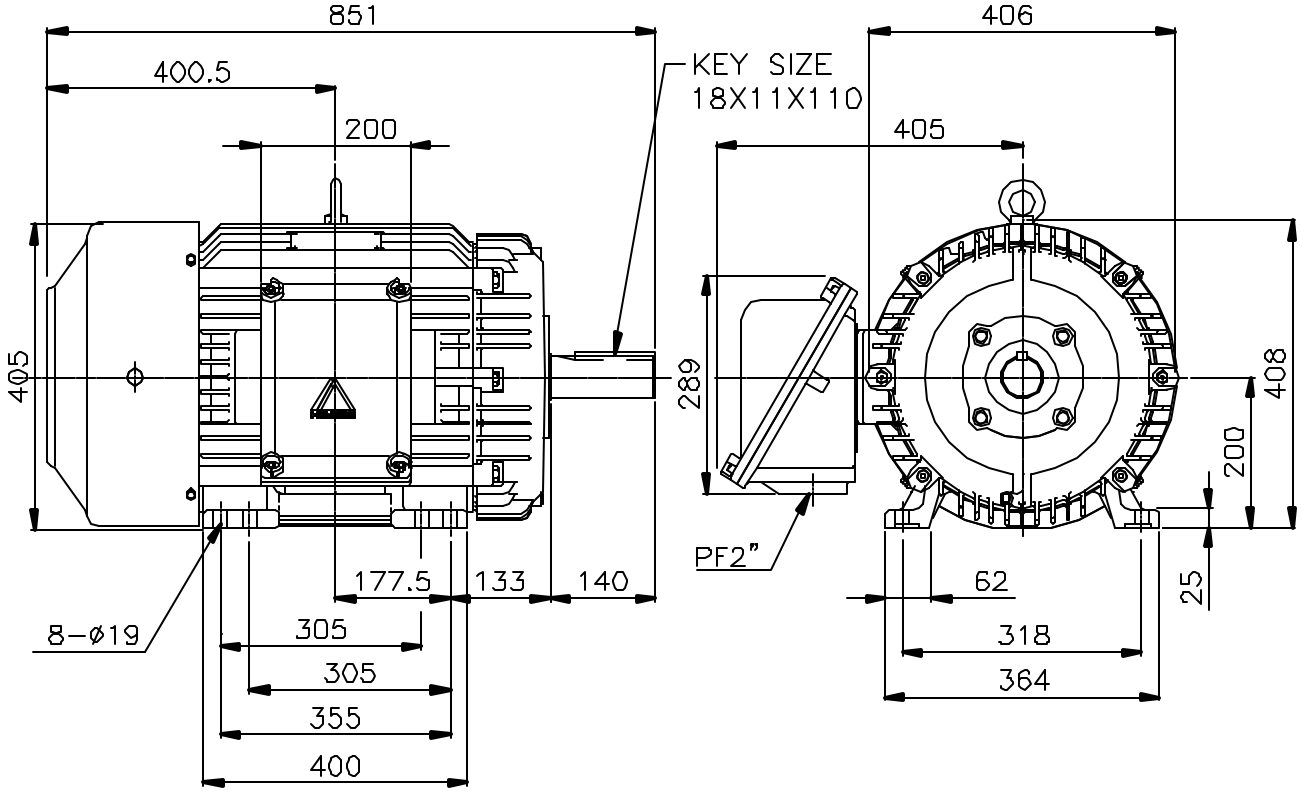

NOTE

1.TOLERANCE :

CENTER HEIGHT	$200^{+0}_{-0.5}$
BASE HOLES	$ø19^{+0.43}_{-0}$
SHAFT DIAMETER	$ø60^{+0.030}_{+0.011}$
KEYWAY WIDTH	$18^{+0}_{-0.043}$
KEYWAY DEPTH	$7^{+0}_{-0\ 2}$

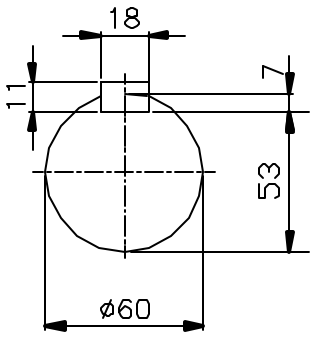

APPD BY	J. H. KIM	UNIT	mm	SUBJECT	KS 200LL 4,6P d2G4	CAD PROJ \ FILE XSDNKS\B2001AA10
CHKD BY	Y. S. KIM	SCALE	1/10	TITLE	OUTLINE	
CHKD BY	S. H. KO	PROJEC'N	3rd Angle			
DSND BY	I. K. KIM	DATE	2002.10.31			
HYUNDAI HEAVY INDUSTRIES CO., LTD. Electro-Electric System Division				REF. NO	B1600XI10	Sheet No. of
				DWG NO	227B1600XI10	Revision No. 0

HYUNDAI HEAVY INDUSTRIES CO., LTD.

본 도면은 현대중공업(주) 재산이므로 허가없이 복사할 수 없음 (취급유의)

THIS DRAWING IS PROPRIETARY TO HHI. NO PART OF THIS DRAWING MAYBE REPRODUCED WITHOUT THE PERMISSION OF HHI.

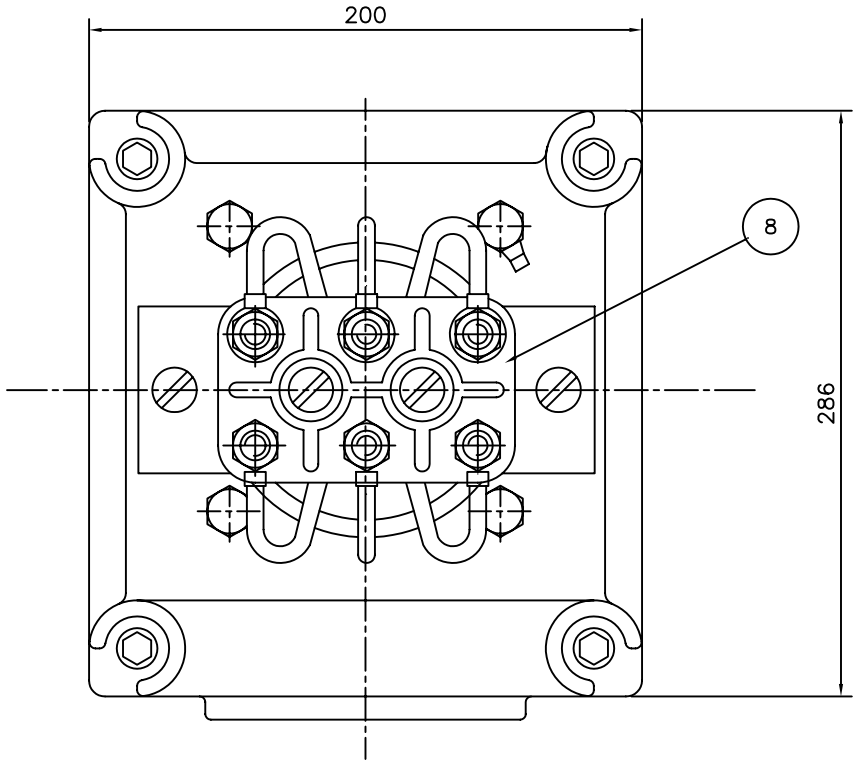

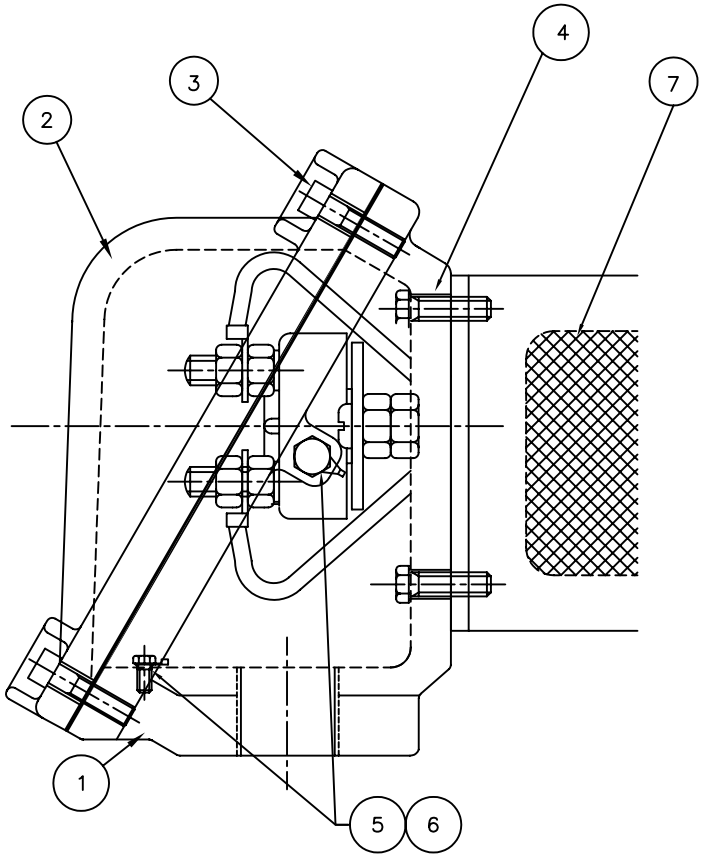

Q'TY	DESCRIPTION	MATERIAL	DIMENSION	WEIGHT	PART NO.	REMARK	NO.
1	TERMINAL BLOCK						8
.	SEALING COMPOUND	D4C29C					7
2	GRD TERMINAL LUG	CU					6
2	GRD. BOLT	S45C					5
4	T/B + FRAME BOLT	S45C					4
4	T/B + COVER BOLT	S45C					3
1	TERMINAL BOX COVER	FC15					2
1	TERMINAL BOX	FC15					1
	ASSEMBLY						

APPD BY		UNIT	MM	SUBJECT	IEC200FR d2G4
CHKD BY		SCALE	N/S		CAD PROJ 명 \ FILE 명 XSMOUT\7B1468LB
CHKD BY		PROJEC'N	3 각법(3rd Angle)	TITLE	MAIN TERMINAL BOX
DSND BY	LEE E.J.	DATE	99.2.2		

HYUNDAI HEAVY INDUSTRIES CO., LTD. ELECTRICAL ENGINEERING DIVISION

REF. NO	7B1470LA	Sheet No. of
DWG NO	227B1470LA	Revision No. 0

REV	DATE	CONTENTS	REVD BY	CHKD BY	CHKD BY	APPD BY